OSHKOSH

AIRPORT PRODUCTS

P-SERIES & MPT-SERIES CHASSIS

Unlike commercial vehicles that are merely adapted to plow snow, the P-Series™ and MPT-Series™ chassis are specially designed to attack the most severe winter conditions. Chock full of the muscle, durability, reliability and value that come with 50 years of Oshkosh expertise, these snow chassis readily accept a range of plows, scrapers, bodies, de-icers and brooms to help you respond full force.

TAKE BACK THE RUNWAY.

PERFORMANCE FEATURES

Heavy-Duty Construction
- Oshkosh® road-proven transfer case; rugged and durable with SmartShift
- Oshkosh steering drive axle with closed wheel end design and heat treated alloy axle shaft are purpose-built for severe conditions
- Large axle capacities allow mounting of heavy-duty snow removal equipment
- Heavy single-channel frame for severe-duty applications

Traditional Cab Design
- Oshkosh extra heavy-duty steel construction
- Reverse slope windshield prevents snow buildup
- Top mounted wipers
- Full-length piano type door hinges with stainless steel hinge pins
- RH curb window
- Tinted safety glass throughout

Equipment Ready
- Integral front frame extensions standard for plow hitch installation
- Cutaway fenders and butterfly hood simplify engine access and equipment mounting
- Narrow hood for superior driver lines of sight to front plow
- Clean frame rails simplify body mounting
- Switches in cab and power outside for lighting and accessories

PROVEN. EFFECTIVE.
THE P-SERIES & MPT-SERIES CHASSIS.

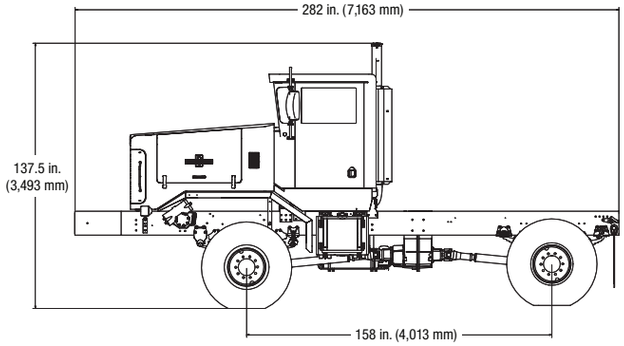

OSHKOSH
AIRPORT PRODUCTS

P-SERIES & MPT-SERIES CHASSIS

CHASSIS

Front Axle (P-Series): Oshkosh® 25K, single reduction with special heat treated alloy steel shafts and Oshkosh cage ring type steering ends

Rear Axle (P-Series):
- 4 x 4, 23K - 38K available
- 6 x 6, 46K - 58K available

Front Axle (MPT-Series): Oshkosh 20K, single reduction with special heat treated alloy steel shafts and Oshkosh cage ring type steering ends

Rear Axle (MPT-Series): 23K

Brakes and Service: Dual system, anti-lock, air operated mechanical

Standard Accessories:
- Bostrom® Sierra Air 400RX driver seat and passenger seat
- Dual top mounted electric windshield wipers with intermittent speed control
- Fresh air type heater and defroster
- 3-point seat belts
- Tilt/telescoping steering column
- West Coast heated motorized mirrors
- Windshield washer

Instrumentation: Gauges, multiplex panel – fuel level, coolant temperature, dual air system pressure, voltmeter, speedometer, tachometer with engine hourmeter

Equipment:
- Air dryer
- Backup alarm
- Crankshaft PTO adapter
- Single 50 gal. (189 L) fuel tank under left door
- Heated fuel/water separator
- 2 ft. (.6 m) integral frame extension at front for equipment mounting
- Rear frame mounted tow hooks (2)

Cooling System:
- Radiator core – fin and tube type
- Fan – temperature controlled clutch with engine mounted fan ring

Electrical System:
- Alternator – 200A
- Lighting and starting – 12V each
- Battery – (3) 12V, 950 CCA each @ 0°F (-18°C), 2,850 CCA total

Engine (P-Series):
- Cummins ISX
- Displacement – 11.9 L
- Horsepower – 320 - 450 @ 2,100 rpm
- Governed rpm – 2,100

Transmission (P-Series): Allison RDS 4000

Engine (MPT-Series):
- Cummins ISX
- Displacement – 11.9 L
- Horsepower – 320 @ 2,100 rpm
- Governed rpm – 2,100

Transmission (MPT-Series): Allison RDS 3000

Frame:
- Single formed channel made of carbon manganese steel, heat treated
- Yield strength – 120,000 psi (827 Mpa) minimum
- RBM – 2,818,000 in.-lb. per rail
- Construction – Grade 8 bolts and locknuts

Lighting:
- Clearance and marker lights comply with federal regulations
- Fender height head lights with integral turn signals
- Rear-mounted stop/tail/turn signal lights with backup light
- Cab light bar for custom light installations

Steering System: Sheppard XD120 integral hydraulic power gear

Front Suspension:
- Hotchkiss, semi-elliptic spring
- Rating – 25,000 lbs. (11,340 kg)

Rear (4 x 4) Suspension:
- Hotchkiss, semi-elliptic spring
- Rating – 27,000 lbs. (12,247 kg)

Rear (6 x 6) Suspension:
- Hendrickson® steel leaf spring, RT-460
- Rating – 46,000 lbs. (20,865 kg)

Tires*:
- Front – 395/85R20, 20 ply
- Rear – 395/85R20, 20 ply

Transfer Case:
- Oshkosh SmartShift electric over air control range shifter
- Model 55000 – 2 speed 4 x 4, Dorr-Miller auto locking differential
- Ratios – 2.66:1 low, 0.98:1 high, 6 x 6 front axle disconnect

Wheelbase:**
- 4 x 4 – 158 in. (4,013 mm)
- 6 x 6 – 175 in. (4,445 mm)

Wheels*:
- Steel disc
- Front – 20 x 10 in. (508 x 254 mm)
- Rear – 20 x 10 in. (508 x 254 mm)

OPTIONS
- Oshkosh ALL STEER® electronic all wheel steering system (23K, 26K, 46K and 52K rear only)
- Integral A/C
- High output cab heater
- Heated windshield
- Power windows
- Side window wipers
- Cab air suspension
- Engine brake
- Engine block heater (120V or 240V)
- High idle/cruise control
- Various lighting packages
- Master battery disconnect at battery
- On-board battery charger (20A self regulating)
- Jump start lugs at battery box
- 4 batteries for total 3,800 CCA
- Pintle hook
- Single tank fuel capacity of 75, 100 and 120 gal. (284, 379 and 454 L), left side
- Controlled traction differential in rear axle
- Bevel gear differential in transfer case (4 x 4 only)
- Provisions for trailer electric

oshkoshairport.com

+1 920 235 9151

*Various configurations available.

**Other wheel bases/dimension combinations available. Consult factory.

©2011 Oshkosh Corporation. Oshkosh, the Oshkosh logo and ALL STEER are registered trademarks and P-Series and MPT-Series are trademarks of Oshkosh Corporation, Oshkosh WI, USA. OA-0005-PCHSS 9/11